Round 4 - Sunday, May 22, 2022

SHOTLINK

AdventHealth Championship

1
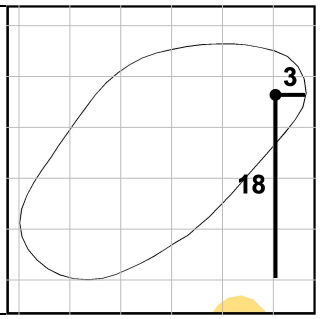

Green Depth **23**

2
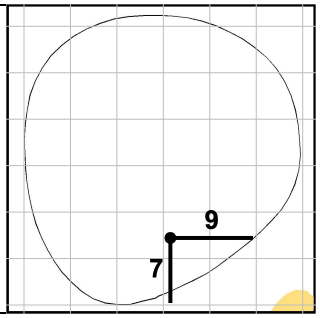

Green Depth **31**

3
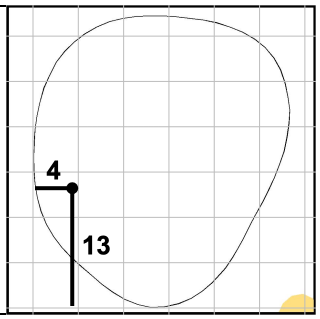

Green Depth **32**

4
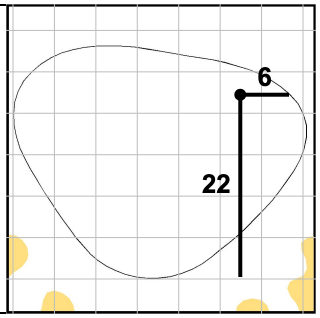

Green Depth **28**

5
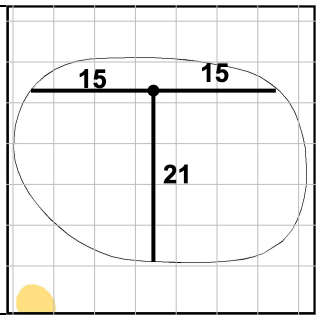

Green Depth **25**

6
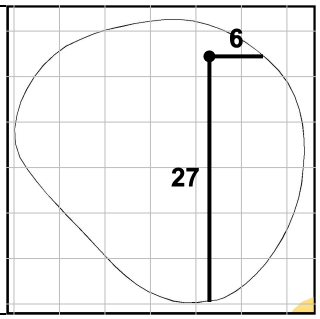

Green Depth **31**

7
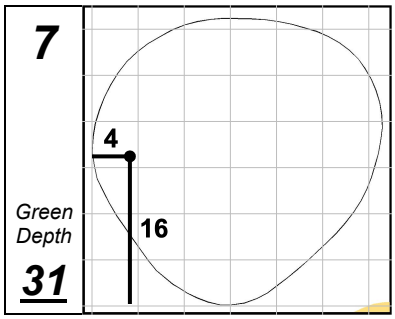

Green Depth **31**

8
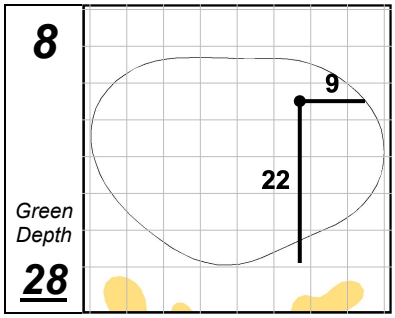

Green Depth **28**

9
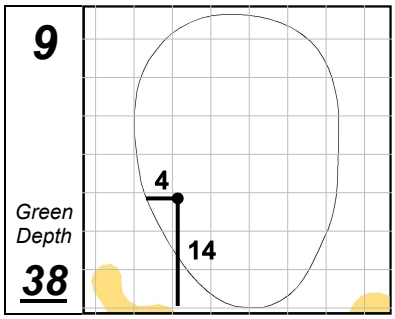

Green Depth **38**

10
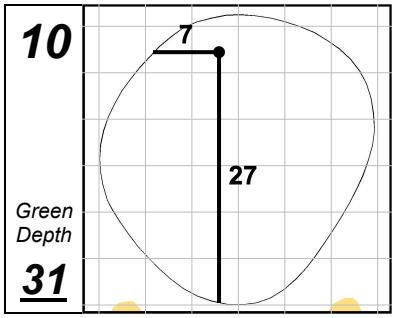

Green Depth **31**

11
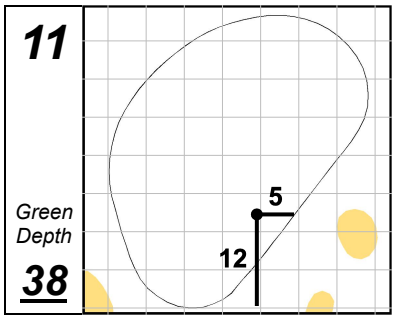

Green Depth **38**

12
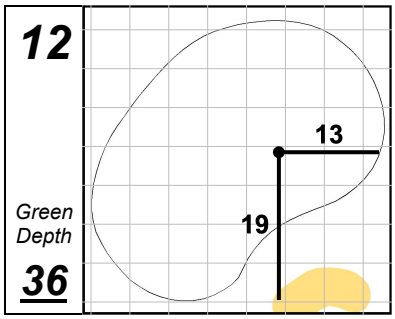

Green Depth **36**

Blue Hills Country Club

13
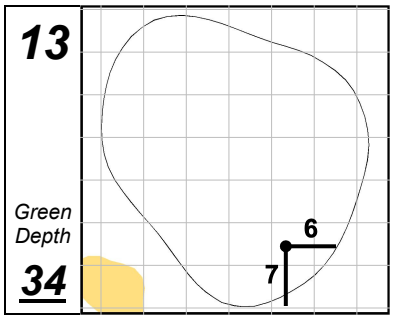

Green Depth **34**

14
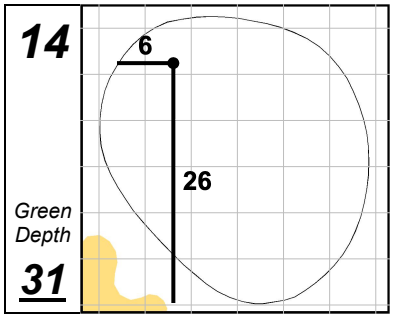

Green Depth **31**

15
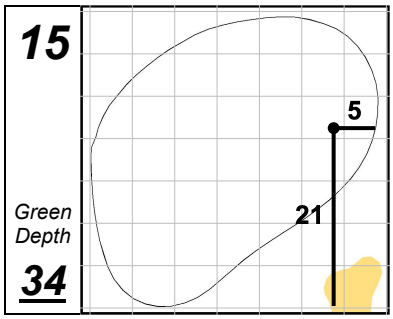

Green Depth **34**

16
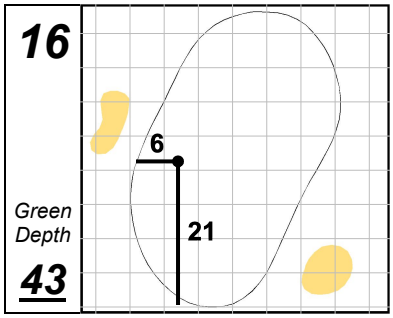

Green Depth **43**

17
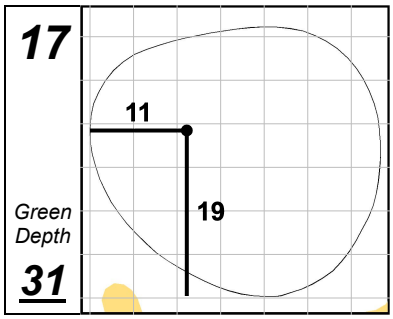

Green Depth **31**

18
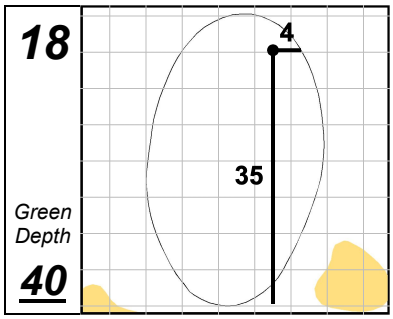

Green Depth **40**

Each side of a complete square on the green represents 5 YARDS.

Saturday, May 21, 2022 4:34:10 PM